# TRB141

## GPIO LTE GATEWAY BOARD

Industrial LTE Cat 1 Gateway Board TRB141 is equipped with multiple Inputs/Outputs and Micro-USB port. TRB141 compact design makes this Gateway perfect for an application where a sole gadget must be remotely managed using I/O's. TRB141 is engineered to be used in Industrial applications therefore it has a wide range of software features such as SMS control, Firewall, RMS and FOTA support.




Multiple Inputs/Outputs for remote monitoring and control

LTE Cat 1 for M2M/IoT communications

Compact size, easy integration

9-30V

Wide range of power supply voltages

RMS

Teltonika Remote Management System compatible

RutOS

Easy to use, secure and feature rich OpenWrt based Operating System

## EFFICIENT

Easy Integration

Compact size

Low Power consumption

## ADVANCED

LTE Cat1 for IoT GPIO connectivity

High performance

Open platform with SDK

## SECURE

OpenVPN and IPsec

Advanced Firewall

Remote management system compatible

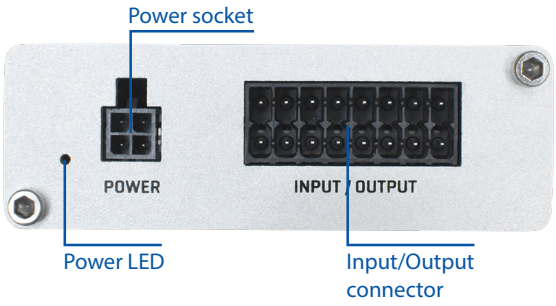


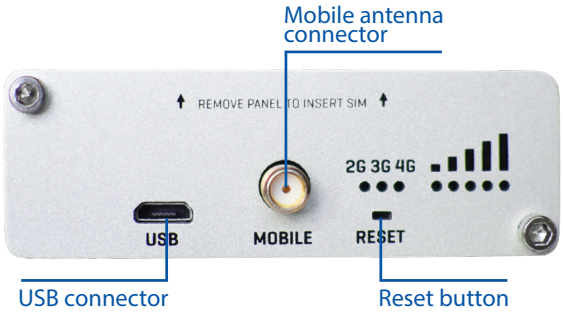


## Hardware

| | |
|---|---|
| Mobile | LTE(Cat1)/3G/2G |
| SIM slot | Mini SIM (2FF) |
| Antenna connector | 1 x SMA for LTE |
| Inputs/Outputs | 2 x Digital inputs, 2 x Relay outputs, 1 x Analog input, 1 x Isolated input, 2 x Digital Inputs/Outputs on power connector |
| CPU | ARM Cortex-A7 1.2 GHz CPU |
| RAM | 128 MB (50 MB available for userspace) |
| Flash | 512 MB (200 MB available for userspace) |
| Input voltage range | 9 - 30 VDC |
| Power connector | 4 pin industrial DC power socket |
| Configuration interface | Virtual NIC via Micro-USB connector |
| LED Indicators | Power, signal, network and data status LEDs |
| Operating temperature | -40° C to 75° C |
| Dimensions | 60 mm x 70 mm x 18 mm |
| Weight | 136 g |

## Software

| | |
|---|---|
| Operating system | RutOS (OpenLinux based Linux OS) |
| Network | NAT, Firewall (port forward, traffic rules, custom rules), DDNS ( >25 service providers supported) |
| Remote management | RMS Support, FOTA support, SSH, CLI, SMS Utilities (status/configuration) |
| Status watchdogs | Ping reboot, periodic reboot |
| Additional features | Internet connectivity over USB virtual network interface |

Copyright © 2019, Teltonika. Specifications and information given in this document are subject to change by Teltonika without prior notice.