Product Specification

2.125Gbps SFP Transceiver

CLSFP13GELXD

CLSFP13GELXDI

CLSFP13GELX

V20140819

Product Features



- Up to 2.125Gbps data links
- 20km with 9/125μm SMF
- 1310nm FP laser
- Duplex LC Connector
- Hot-pluggable SFP footprint
- Single 3. 3V power supply
- Operating temperature: Ref.to ordering info.
- RoHS
- Digital Diagnostic Monitor (DDM)*

Applications

√ 1.25Gbps 1000Base-LX

√ 1G/2G Fiber Channel

* CLSFP13GELX not support DDM

1. Product Description

The CLSFP13GELXD/I CLSFP13GELX are small form factor pluggable (SFP) transceiver compatible with multi-sourcing agreement (MSA). It is suitable for single-mode fiber (SMF) communications in 1.25Gbps Ethernet and 1G/2G Fiber Channel.

2. Regulatory Compliance

C-light transceivers are Class 1 Laser Products comply with FDA regulations. Meet Class 1 eye safety requirements of EN 60825 and the electrical safety requirements of EN 60950.

3. Absolute Maximum Ratings

Parameter	Symbol	Min.	Max.	Unit
Supply Voltage	V_{CC}	-0.5	3.6	V
Storage Temperature	T_S	-40	85	°C
Operating Case Temperature	T_C	Refer to ordering information		

4. Recommended Operating Conditions

Parameter	Symbol	Min.	Typical	Max.	Unit
Operating Case Temperature	T_C	Refer to ordering information			
Power Supply Voltage	V_{CC}	3.15	3.3	3.45	V
Power Supply Current	I_{CC}			250	mA
Data Rate			2.125		GBps
Max Link Length on 9/125μm SMF	Lmax			20	km

5. Optical Characteristics

Parameter	Symbol	Min.	Typical	Max.	Unit
Transmitter					
Centre Wavelength	λc	1260	1310	1360	nm
Spectral Width (RMS)	σ			3	nm
Average Output Power	Pout	-9		-3	dBm
Extinction Ratio	EX	9			dB
Optical Rise/Fall Time	tr/tf			1	ns
Receiver					
Centre Wavelength	λc	1200	1310	1600	nm
Receiver Sensitivity	P_{IN}			-20	dBm

Receiver Overload	Pmax	1			dBm
LOS De-Assert	LOS_D			-24	dBm
LOS Assert	LOS_A	-35			dBm
LOS Hysteresis		0.5		4.5	dB

6. Electrical Characteristics

Parameter	Symbol	Min.	Typical	Max.	Unit
Transmitter					
Input Differential Impedance	Zin	90	100	110	Ω
Data Input Swing Differential	Vin	500		2400	mV
Tx-Dis Disable	Vd	2.0		Vcc	V
Tx-Dis Enable	Ven	0		0.8	V
TX-Fault (Fault)		2.0		Vcc+0.3	V
TX-Fault (Normal)		0		0.8	V
Receiver					
Data Output Swing Differential	Vout	370		2000	mV
Rx-Los Fault	Vlf	2.0		Vcc+0.3	V
Rx-Los Normal	Vln	0		0+0.8	V

7. Pin Descriptions

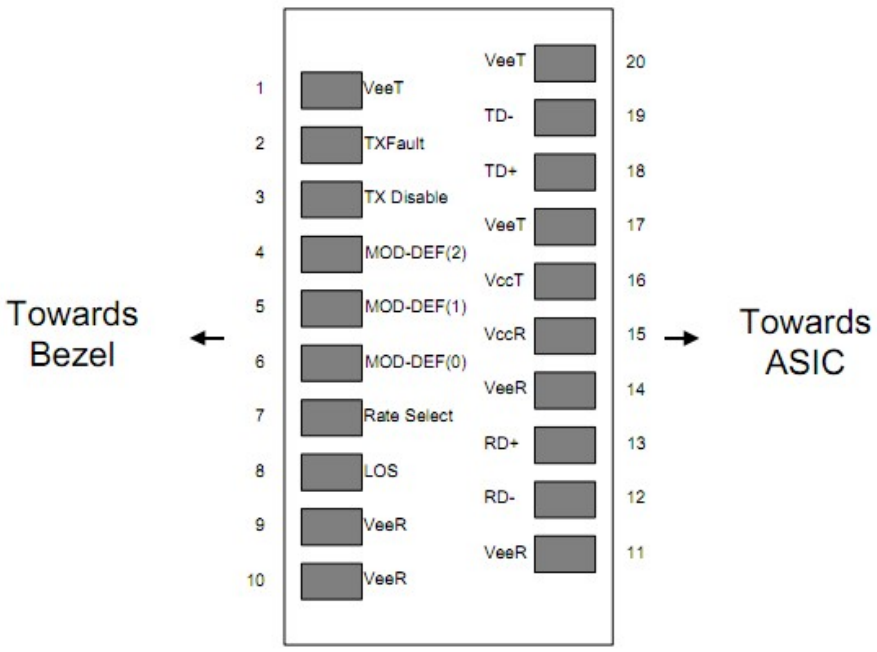

Diagram of Host Board Connector Block Pin Numbers and Names

Pin	Symbol	Description	Ref.
1	VEET	Transmitter Ground (Common with Receiver Ground)	6.1
2	TFAULT	Transmitter Fault. Not supported.	
3	TDIS	Transmitter Disable. Laser output disabled on high or open.	6.2
4	MOD_DEF(2)	Module Definition 2. Data line for Serial ID.	6.3
5	MOD_DEF(1)	Module Definition 1. Clock line for Serial ID.	6.3
6	MOD_DEF(0)	Module Definition 0. Grounded within the module.	6.3
7	Rate Select	No connection required	
8	LOS	Loss of Signal indication. Logic 0 indicates normal operation.	6.4
9	VEER	Receiver Ground (Common with Transmitter Ground)	6.1
10	VEER	Receiver Ground (Common with Transmitter Ground)	6.1
11	VEER	Receiver Ground (Common with Transmitter Ground)	6.1
12	RD-	Receiver Inverted DATA out. AC Coupled.	
13	RD+	Receiver Non-inverted DATA out. AC Coupled.	
14	VEER	Receiver Ground (Common with Transmitter Ground)	6.1
15	VCCR	Receiver Power Supply	
16	VCCT	Transmitter Power Supply	
17	VEET	Transmitter Ground (Common with Receiver Ground)	6.1
18	TD+	Transmitter Non-Inverted DATA in. AC Coupled.	
19	TD-	Transmitter Inverted DATA in. AC Coupled.	
20	VEET	Transmitter Ground (Common with Receiver Ground)	6.1

Notes:

6.1 Circuit ground is internally isolated from chassis ground.

6.2 Laser output disabled on TDIS >2.0V or open, enabled on TDIS <0.8V.

6.3 Should be pulled up with 4.7k - 10kohms on host board to a voltage between 2.0V and 3.6V. MOD_DEF(0) pulls line low to indicate module is plugged in.

6.4 LOS is open collector output. Should be pulled up with 4.7k -10kohms on host board to a voltage between 2.0V and 3.6V. Logic 0 indicates normal operation; logic 1 indicates loss of signal.

8. EEPROM & DDM THRESHOLD

8.1 EEPROM

2 wire address 1010000X (A0h)

0~95 Serial ID Defined by SFP MSA (96 bytes)
96~127 Vendor Speific (32 bytes)
128~255 Reserved (128 bytes)

EEPROM Serial ID Memory Contents

Add.	Size (Bytes)	Name of Field	Hex	Description
BASE ID FIELDS				
0	1	Identifier	03	SFP
1	1	Ext. Identifier	04	SFP function is defined by serial ID only
2	1	Connector	07	LC
3-10	8	Transceiver	00 00 00 02 00 00 00 00	Transmitter Code
11	1	Encoding	01	8B/10B
12	1	BR, Nominal	0D	2.125Gbps
13	1	Reserved	00	
14	1	Length (9um) km	0A	20km
15	1	Length (9um) km	14	
16	1	OM2 Length (50um) m	00	
17	1	OM1 Length (62.5um) m	00	
18	1	Length (Copper)	00	
19	1	OM3 Length (50um) m	00	
20-35	16	Vendor Name	43 2D 4C 49 47 48 54 20 20 20 20 20 20 20 20 20	C-LIGHT * OEM available
36	1	Reserved	00	
37-39	3	Vendor OUI	00 00 00	* OEM available
40-55	16	Vendor PN	xx xx xx xx xx xx xx xx xx xx xx xx xx xx xx xx	* OEM available
56-59	4	Vendor Rev	30 31 20 20	01
60-61	2	Wavelength	05 IE	1310nm
62	1	Reserved	00	
63	1	CC_BASE	xx	Check Code for Base ID Field

EXTENDED ID FIELDS				
64-65	2	Options	00 1A	Loss/ TX_Fault/ TX_Disable
66	1	BR, Max	00	
67	1	BR, Min	00	
68-83	16	Vendor SN	43 4C xx xx xx xx xx xx xx xx xx 20 20 20 20 20	SN of Transceiver (ASCII). Exp. "CLXXXXXXXXX"
84-91	8	Date Code	xx xx xx xx xx xx 20 20	YY/MM/DD Exp. 120727
92	1	Diagnostic Monitoring	68	CLSFP13GELXD/I
			08	CLSFP13GELX
93	1	Enhanced Options	90	CLSFP13GELXD/I
			00	CLSFP13GELX
94	1	SFF_8472 Compliance	01	CLSFP13GELXD/I
			00	CLSFP13GELX
95	1	CC_EXT	checksum	Checksum for Extened ID
VENDOR SPECIFIC ID FIELDS				
96-127	32	Vendor Specific	20 20 20……	Depends on Customer Info
128-255	128	Reserved	FF FF FF……	Depends on Customer Info

8.1 DDM THRESHOLD

		Low Alarm	Low Warn	High Warn	High Alarm
Temperature	CLSFP13GELXDI	-45℃	-40℃	85℃	90℃
	CLSFP13GELXD	-20℃	-10℃	85℃	90℃
Voltage		3V	3.1V	3.5V	3.6V
Tx Bias		15mA	20mA	40mA	45mA
Tx Power		-13.5dBm	-9.5dBm	-1dBm	1dBm
Rx Power		-23dBm	-19dBm	-3dBm	1dBm

9. Recommend Circuit

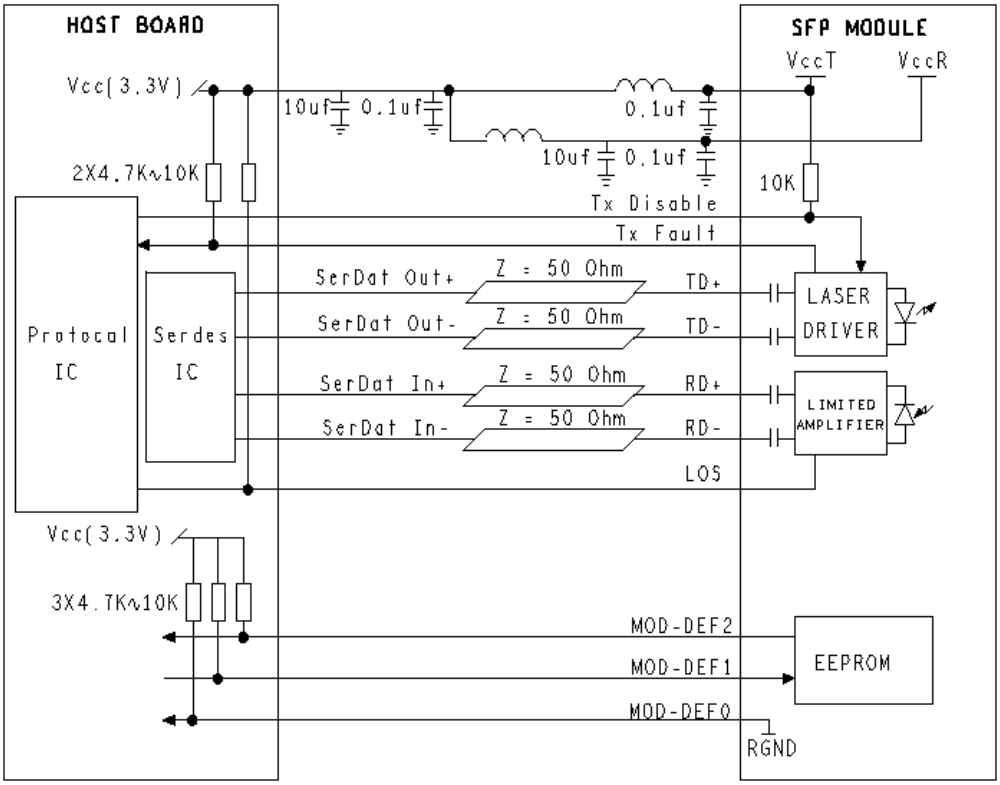

10. Mechanical Specifications

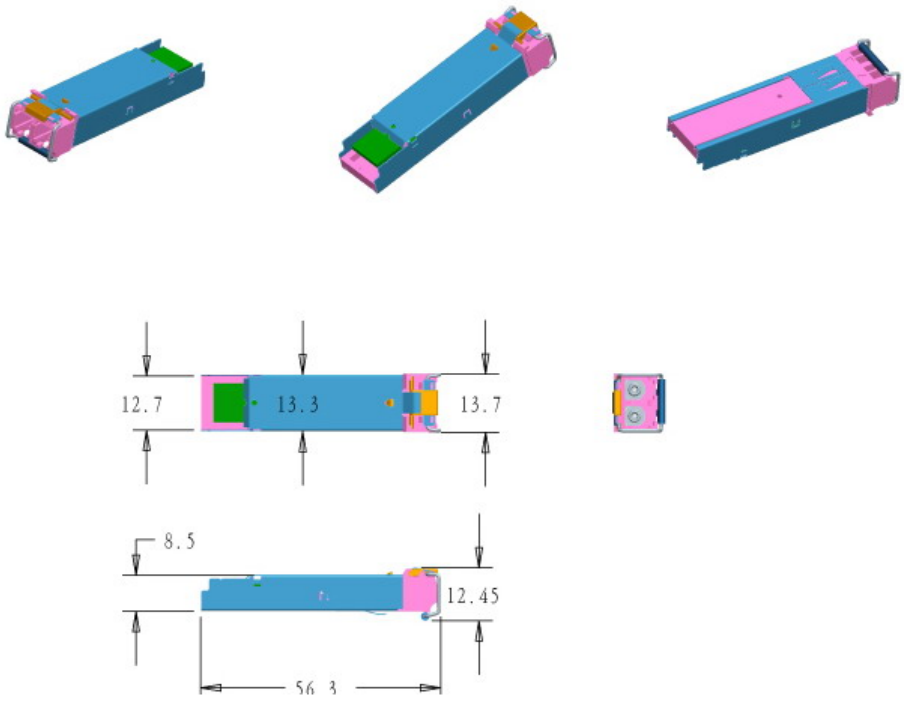

11. LABEL

C-LIGHT offers label OEM design and print.
Label barcode supports code128 and 2D barcode
SIZE: 30mm * 9mm

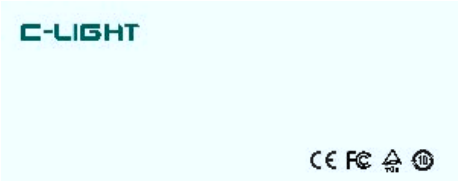

Ordering Information

Part No.	Data Rate	DDM	Wave	Fiber Type	Dist.	Temp.	Optical Interface
CLSFP13GELXD	2.125Gbps	yes	1310nm	SMF	20km	-5~75℃	LC
CLSFP13GELXDI	2.125Gbps	yes	1310nm	SMF	20km	-40~85℃	LC
CLSFP13GELX	2.125Gbps	no	1310nm	SMF	20km	-10~85℃	LC

VERSION UPDATE:

VERSION NO.	DATE	UPDATED INFORMATION
V20131010	20131010	1. EEPROM& DDM Threshold updated 2. "LABEL" added 3. Ordering information updated 4. Product picture updated
V20140819	20140819	1.Ordering information updated

NOTICE:

C-LIGHT reserves the right to make changes to this product in this specification without notice, in order to improve product performance.

CONTACT:

Shenzhen C-Light network communication co., Ltd

4F East, Building 1, Shunheda Factory Plant, Liuxiandong industrial park,
Xili, Nanshan Dist, Shenzhen
PR. China

Tel: 86-755-2778-9180 **Fax:** 86-755-2778-9174
E-mail: sales@c-light.com http://www.c-light.com